TRACO POWER

DC/DC Medical Converter

TIM 2SM Series, 2 Watt

- **Compact SMD-16-package**
- **I/O isolation 5000 VAC rated for 250 VAC working voltage**
- **Certification according to IEC/EN/ES 60601-1 edition 3.2 for 2xMOPP and operation up to 5000 m altitude**
- **Low leakage current < 2 µA**
- **Extended operating temperature range –40°C to 95°C.**
- **5-year product warranty**

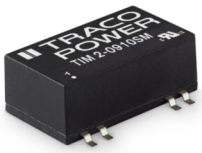

2MOPP cULus CB Scheme

ES 60601-1 IEC 60601-1
UL 62368-1 IEC 62368-1

The TIM 2SM series is a range of 2 Watt DC/DC converters in compact SMD package and with reinforced isolation of 5000 VACrms for medical applications. With a low leakage current of less than 2 µA the converters are predestined to insulate electrical equipment from the applied parts to patient (BF classification). The models are approved to IEC/EN/ES 60601-1 edition 3.2 for 2xMOPP up to an altitude of 5000m and come along with an ISO 14971 risk management file.

Models

Order Code	Input Voltage Range	Output 1		Output 2		Efficiency
		Vnom	Imax	Vnom	Imax	typ.
TIM 2-0910SM	4.5 - 12 VDC (9 VDC nom.)	3.3 VDC	600 mA			75 %
TIM 2-0911SM		5 VDC	400 mA			78 %
TIM 2-0919SM		9 VDC	222 mA			78 %
TIM 2-0912SM		12 VDC	167 mA			82 %
TIM 2-0913SM		15 VDC	134 mA			82 %
TIM 2-0915SM		24 VDC	83 mA			82 %
TIM 2-0922SM		+12 VDC	83 mA	–12 VDC	83 mA	82 %
TIM 2-0923SM		+15 VDC	67 mA	–15 VDC	67 mA	80 %
TIM 2-1210SM	9 - 18 VDC (12 VDC nom.)	3.3 VDC	600 mA			76 %
TIM 2-1211SM		5 VDC	400 mA			78 %
TIM 2-1219SM		9 VDC	222 mA			79 %
TIM 2-1212SM		12 VDC	167 mA			82 %
TIM 2-1213SM		15 VDC	134 mA			82 %
TIM 2-1215SM		24 VDC	83 mA			81 %
TIM 2-1222SM		+12 VDC	83 mA	–12 VDC	83 mA	81 %
TIM 2-1223SM		+15 VDC	67 mA	–15 VDC	67 mA	81 %
TIM 2-2410SM	18 - 36 VDC (24 VDC nom.)	3.3 VDC	600 mA			76 %
TIM 2-2411SM		5 VDC	400 mA			79 %
TIM 2-2419SM		9 VDC	222 mA			80 %
TIM 2-2412SM		12 VDC	167 mA			81 %
TIM 2-2413SM		15 VDC	134 mA			81 %
TIM 2-2415SM		24 VDC	83 mA			81 %
TIM 2-2422SM		+12 VDC	83 mA	–12 VDC	83 mA	81 %
TIM 2-2423SM		+15 VDC	67 mA	–15 VDC	67 mA	81 %
TIM 2-4810SM	36 - 75 VDC (48 VDC nom.)	3.3 VDC	600 mA			76 %
TIM 2-4811SM		5 VDC	400 mA			78 %
TIM 2-4819SM		9 VDC	222 mA			79 %
TIM 2-4812SM		12 VDC	167 mA			80 %
TIM 2-4813SM		15 VDC	134 mA			82 %
TIM 2-4815SM		24 VDC	83 mA			81 %
TIM 2-4822SM		+12 VDC	83 mA	–12 VDC	83 mA	81 %
TIM 2-4823SM		+15 VDC	67 mA	–15 VDC	67 mA	81 %

Input Specifications

Input Current	- At no load	9 Vin models:	80 mA typ.
		12 Vin models:	40 mA typ.
		24 Vin models:	25 mA typ.
		48 Vin models:	12 mA typ.
Surge Voltage		9 Vin models:	15 VDC max. (1 s max.)
		12 Vin models:	25 VDC max. (1 s max.)
		24 Vin models:	50 VDC max. (1 s max.)
		48 Vin models:	100 VDC max. (1 s max.)
Under Voltage Lockout		9 Vin models:	2 VDC min. / 3 VDC typ. / 4 VDC max.
		12 Vin models:	6 VDC min. / 7 VDC typ. / 8 VDC max.
		24 Vin models:	13 VDC min. / 15 VDC typ. / 17 VDC max.
		48 Vin models:	29 VDC min. / 32 VDC typ. / 35 VDC max.
Recommended Input Fuse		9 Vin models:	1'000 mA (slow blow)
		12 Vin models:	500 mA (slow blow)
		24 Vin models:	315 mA (slow blow)
		48 Vin models:	160 mA (slow blow)
			(The need of an external fuse has to be assessed in the final application.)
Input Filter			Internal Capacitor

Output Specifications

Voltage Set Accuracy			±1% max.
Regulation	- Input Variation (Vmin - Vmax)	single output models:	0.2% max.
		dual output models:	0.2% max.
	- Load Variation (10 - 90%)	single output models:	0.5% max.
		dual output models:	0.8% max. (Output 1)
			0.8% max. (Output 2)
	- Cross Regulation (25% / 100% asym. load)	dual output models:	5% max.
Ripple and Noise	- 20 MHz Bandwidth		50 mVp-p typ.
Capacitive Load	- single output	3.3 Vout models:	1'000 µF max.
		5 Vout models:	1'000 µF max.
		9 Vout models:	430 µF max.
		12 Vout models:	220 µF max.
		15 Vout models:	170 µF max.
		24 Vout models:	100 µF max.
	- dual output	12 / -12 Vout models:	170 / 170 µF max.
		15 / -15 Vout models:	100 / 100 µF max.
Minimum Load			Not required
Temperature Coefficient			±0.02 %/K max.
Start-up Time			10 ms typ. / 20 ms max.
Short Circuit Protection			Continuous, Automatic recovery
Overload Protection			Foldback Mode
Overvoltage Protection			104 - 197% of Vout nom. (depending on model)
			4 - 6.5 VDC (3.3 Vout models)
			6 - 8 VDC (5 Vout models)
			10 - 14 VDC (9 Vout models)
			13 - 19 VDC (12 Vout models)
			16 - 22 VDC (15 Vout models)
			25 - 35 VDC (24 Vout models)
Transient Response	- Response Time		500 µs typ. (25% Load Step)

All specifications valid at nominal voltage, resistive full load and +25°C after warm-up time, unless otherwise stated.

Safety Specifications

Standards	- IT / Multimedia Equipment		EN 62368-1 IEC 62368-1 UL 62368-1
	- Medical Equipment		EN 60601-1 IEC 60601-1 ANSI/AAMI ES 60601-1 2 x MOPP (Means Of Patient Protection)
	- Certification Documents		www.tracopower.com/tim2sm-safety-cert
Energy Source	- Output, acc. to 62368-1		ES1
Power Source	- Output, acc. to 62368-1		PS1
Pollution Degree			PD 2
Over Voltage Category			Not mains connected

EMC Specifications

EMI (Emissions)			EN 60601-1-2 edition 4 (Medical Devices)
	- Conducted Emissions		EN 55011 class A (with external filter) EN 55011 class B (with external filter) EN 55032 class A (with external filter) EN 55032 class B (with external filter) FCC 47 Part 15 class A (with external filter) FCC 47 Part 18 class B (with external filter)
	- Radiated Emissions		EN 55011 class A (with external filter) EN 55011 class B (with external filter) EN 55032 class A (with external filter) EN 55032 class B (with external filter) FCC 47 Part 15 class A (with external filter) FCC 47 Part 18 class B (with external filter)
		External filter proposal:	www.tracopower.com/tim2sm-emc-filter
EMS (Immunity)			EN 60601-1-2 edition 4 (Medical Devices)
	- Electrostatic Discharge	Air:	EN 61000-4-2, ±15 kV, perf. criteria A
		Contact:	EN 61000-4-2, ±8 kV, perf. criteria A
	- RF Electromagnetic Field		EN 61000-4-3, 10 V/m, perf. criteria A
	- EFT (Burst) / Surge		EN 61000-4-4, ±2 kV, perf. criteria A
			EN 61000-4-5, ±1 kV, perf. criteria A
		Ext. input component:	9 Vin models: KY 1000 µF || TVS SMDJ18A 12 Vin models: KY 470 µF 24 Vin models: KY 470 µF 48 Vin models: KY 220 µF
	- Conducted RF Disturbances		EN 61000-4-6, 10 Vrms, perf. criteria A
	- PF Magnetic Field	Continuous:	EN 61000-4-8, 100 A/m, perf. criteria A
		1 s:	EN 61000-4-8, 1000 A/m, perf. criteria A

General Specifications

Relative Humidity			95% max. (non condensing)
Temperature Ranges	- Operating Temperature		–40°C to +95°C
	- Approved Ambient Temp.	60601-1:	+85°C max.
	- Case Temperature		+105°C max.
	- Storage Temperature		–55°C to +125°C
Power Derating	- High Temperature		6.67 %/K above 90°C
		See application note:	www.tracopower.com/tim2sm-cc
Cooling System			Natural convection (20 LFM)
Remote Control	- Current Controlled Remote (passive = on)		On: open circuit Off: 2 to 4 mA current (internal 1 kΩ resistor) Refers to 'Remote' and '-Vin' Pin
		External circuit proposal:	www.tracopower.com/info/current-remote.pdf
	- Off Idle Input Current		2.5 mA typ.

All specifications valid at nominal voltage, resistive full load and +25°C after warm-up time, unless otherwise stated.

Altitude During Operation		5'000 m max.
Regulator Topology		Flyback Converter, RCC Converter
Switching Frequency		100 kHz min. (RCC)
Insulation System		Reinforced Insulation
Working Voltage (rated)		250 VAC
Isolation Test Voltage	- Input to Output, 60 s	5'000 VAC
Creepage	- Input to Output	8 mm min.
Clearance	- Input to Output	8 mm min.
Isolation Resistance	- Input to Output, 500 VDC	10'000 MΩ min.
Isolation Capacitance	- Input to Output, 100 kHz, 1 V	16 pF typ. 20 pF max.
Leakage Current	- Touch Current	2 µA max. (at 240 VAC / 60 Hz)
Reliability	- Calculated MTBF	6'809'000 h (MIL-HDBK-217F, ground benign)
Moisture Sensitivity (MSL)		Level 2 (J-STD-033C)
Washing Process		According to Cleaning Guideline www.tracopower.com/info/cleaning.pdf
Environment	- Vibration	MIL-STD-810F
	- Mechanical Shock	MIL-STD-810F
	- Thermal Shock	MIL-STD-810F
Housing Material		Non-conductive Plastic (UL 94 V-0 rated)
Base Material		Non-conductive Plastic (UL 94 V-0 rated)
Potting Material		Silicone (UL 94 V-0 rated)
Pin Material		Copper
Pin Foundation Plating		Nickel (1 - 3 µm)
Pin Surface Plating		Tin (7 - 12 µm), matte
Housing Type		Plastic Case
Mounting Type		PCB Mount
Connection Type		SMD (Surface-Mount Device)
Footprint Type		SMD16
Soldering Profile		Lead-Free Reflow Soldering (acc. J-STD-020E) 245°C max. (Tc) 10 s max. (tp, at Tp - 5°C) 85 s max. (tL, time above 217°C) See application note: www.tracopower.com/info/reflow-soldering.pdf
Weight		7 g
Environmental Compliance	- REACH Declaration	www.tracopower.com/info/reach-declaration.pdf REACH SVHC list compliant REACH Annex XVII compliant
	- RoHS Declaration	www.tracopower.com/info/rohs-declaration.pdf Exemptions: 7(a), 7(c)-I (RoHS exemptions refer to the component concentration only, not to the overall concentration in the product (O5A rule).)
	- SCIP Reference Number	f17461b2-cd04-42f5-8ba9-89dfa697a6ff

Additional Information

Supporting Documents	www.tracopower.com/overview/tim2sm
Frequently Asked Questions	www.tracopower.com/glossary-faq
Glossary	www.tracopower.com/info/glossary.pdf
Service Portal	www.tracoserviceportal.com

All specifications valid at nominal voltage, resistive full load and +25°C after warm-up time, unless otherwise stated.

Outline Dimensions

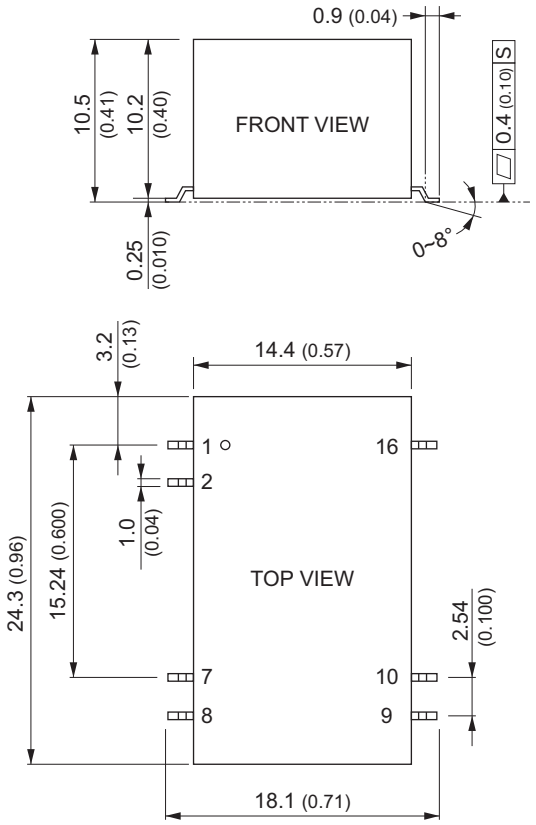

Dimensions in mm (inch)
Tolerances ±0.5 (±0.02)
Pin Ø 0.5 ±0.1 (0.02 ±0.004)
Pin pitch tolerances ±0.25 (±0.01)

Pinout		
Pin	**Single Output**	**Dual Output**
1	–Vin (GND)	–Vin (GND)
2	Remote	Remote
7	NC	NC
8	NC	Common
9	+Vout	+Vout
10	–Vout	–Vout
16	+Vin (Vcc)	+Vin (Vcc)

NC: Not connected

Recommended Solder Pad Layout

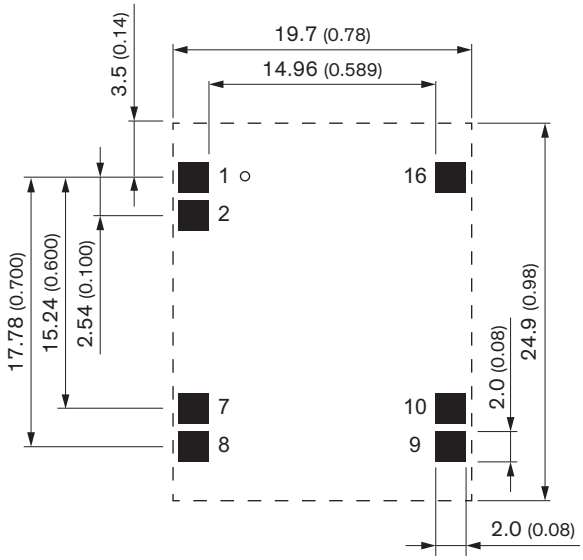

© Copyright 2026 Traco Electronic AG